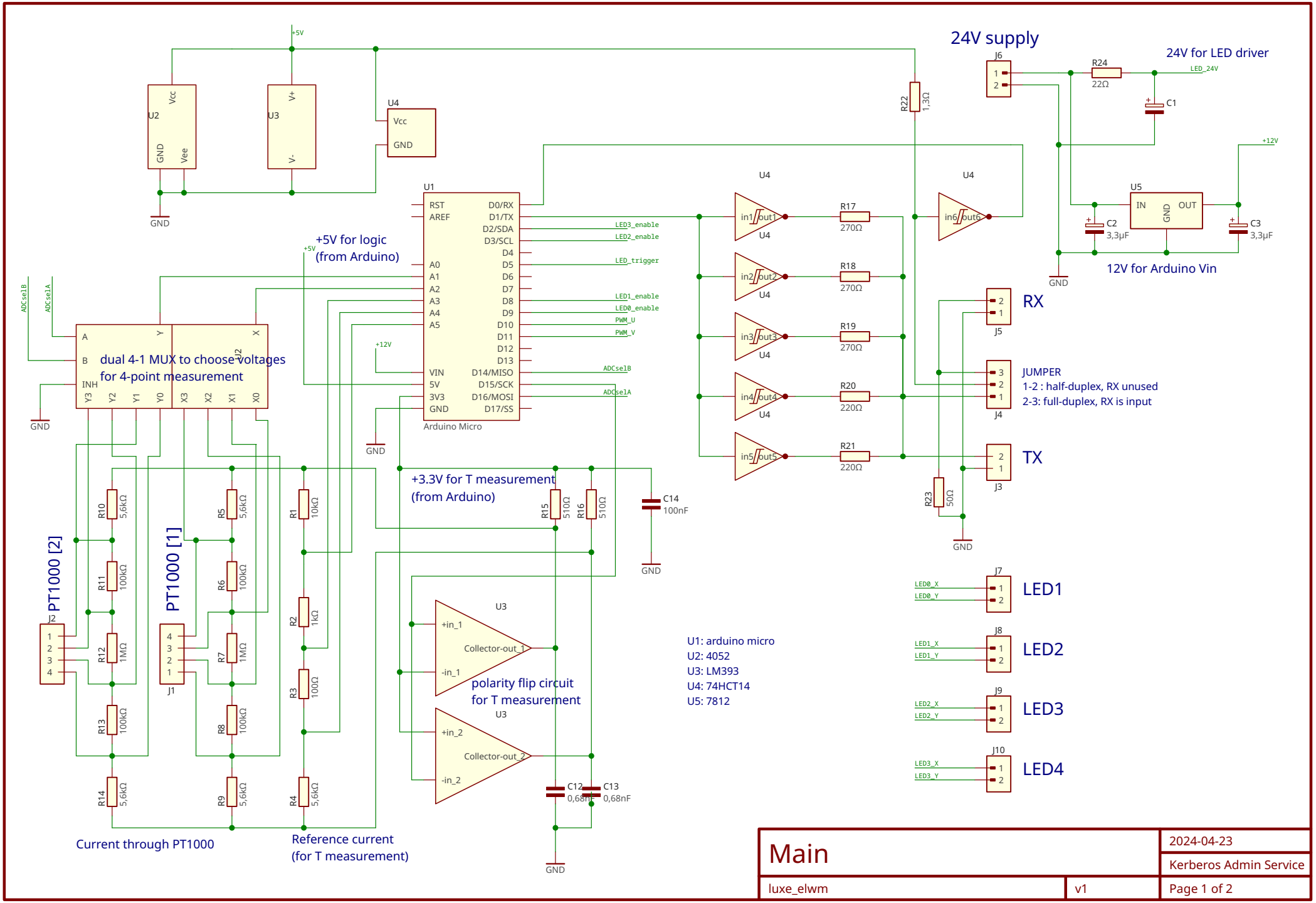
24V supply
24V for LED driver
+5V for logic
(from Arduino)
dual 4-1 MUX to choose voltages
for 4-point measurement
Arduino Micro
+3.3V for T measurement
(from Arduino)
polarity flip circuit
for T measurement
PT1000 [2]
PT1000 [1]
Current through PT1000
Reference current
(for T measurement)
12V for Arduino Vin
RX
TX
JUMPER
1-2 : half-duplex, RX unused
2-3: full-duplex, RX is input
LED1
LED2
LED3
LED4
U1: arduino micro
U2: 4052
U3: LM393
U4: 74HCT14
U5: 7812
Main
2024-04-23
Kerberos Admin Service
luxe_elwm
v1
Page 1 of 2

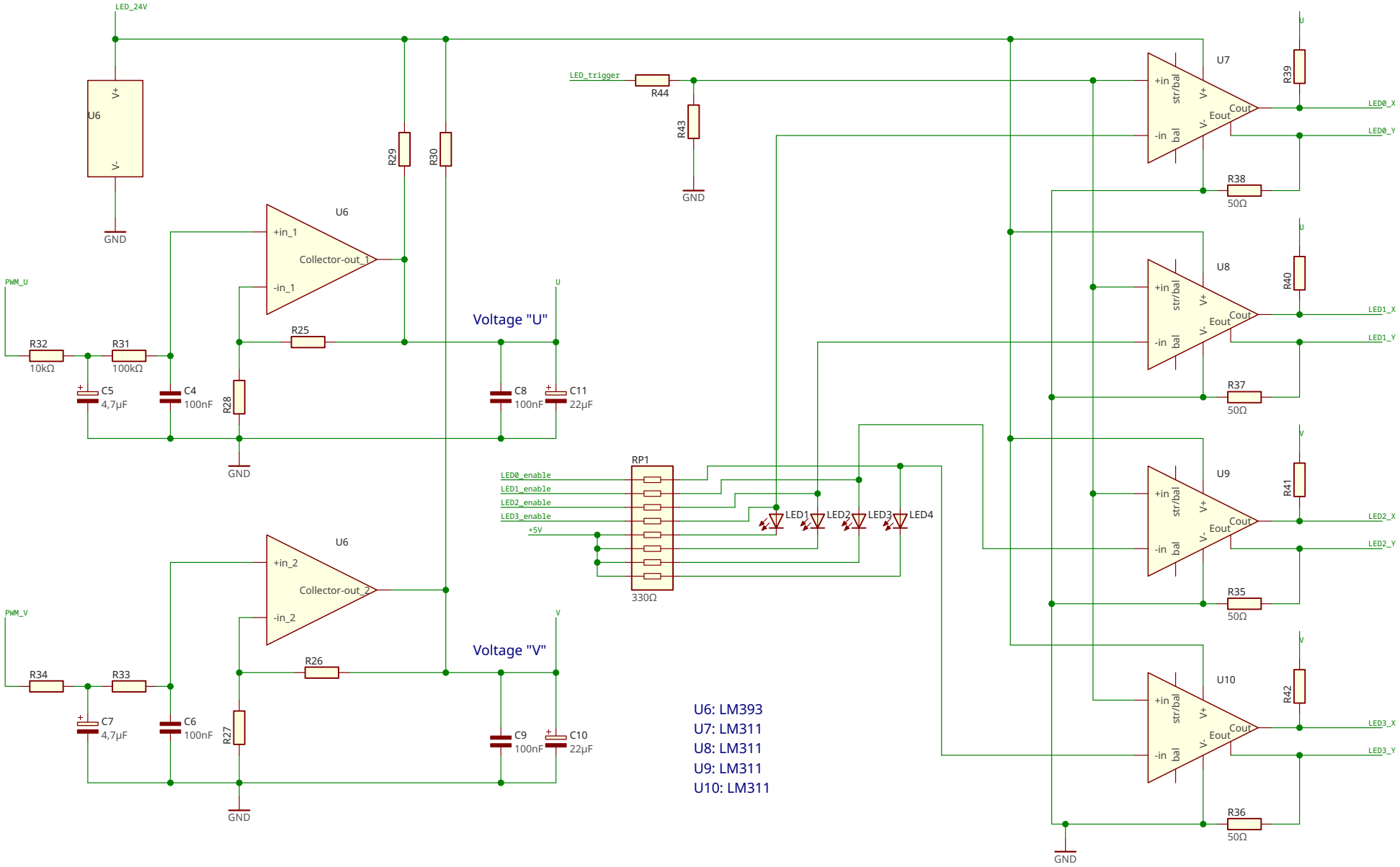

LED driver

		2024-04-23
		Kerberos Admin Service
luxe_elwm	v1	Page 2 of 2