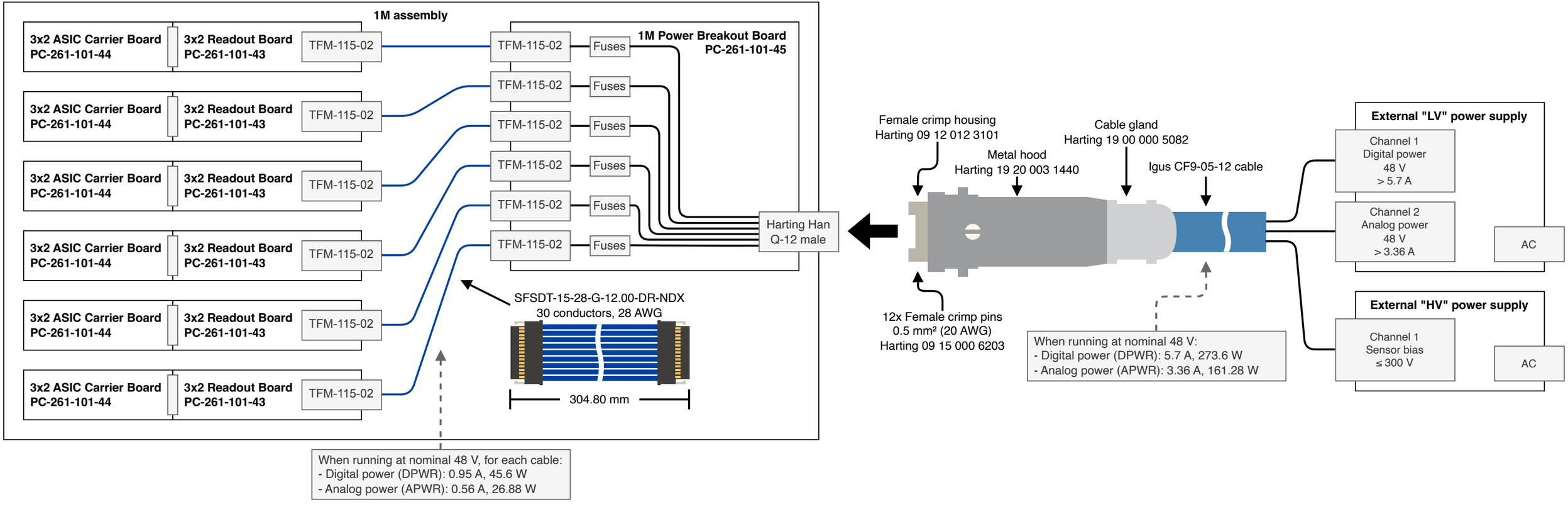Power distribution diagram for 1M assemblies