| REV | DESCRIPTION | DWN | CHKR | APVD | DATE |
|---|---|---|---|---|---|
| 1 | PER ECR-1027, ADDED ITEM 3, EOS TARGET ASSEMBLY. | GB | OF | SG | 4/24 2015 |
| 02 | PER ECR-Txxxxx | GB | GB | SG | 5/3 2021 |

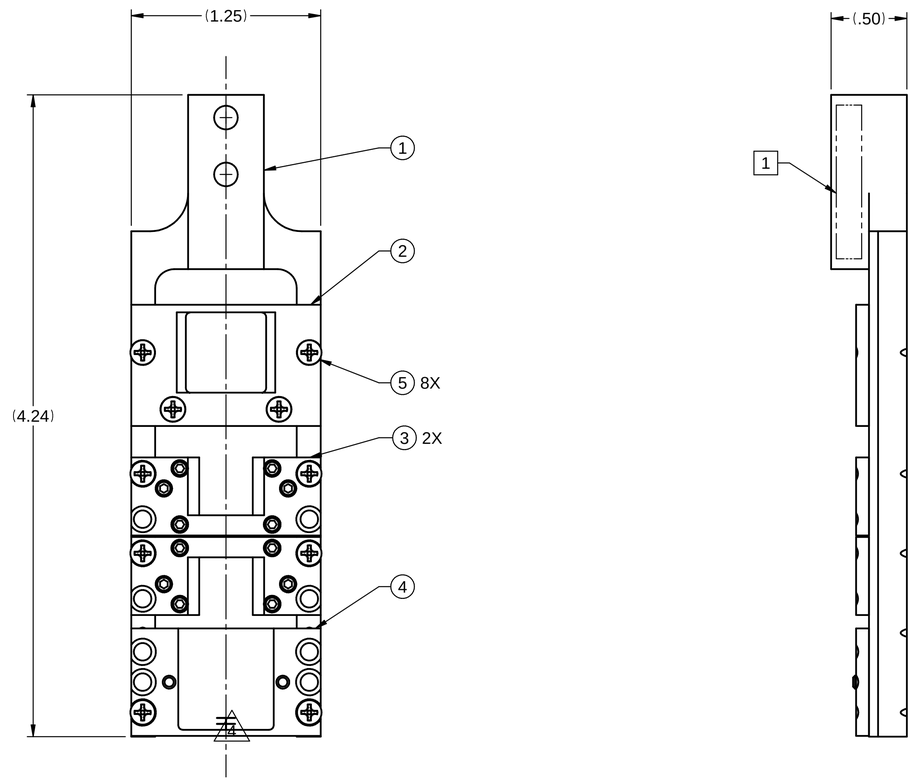


**ULTRA HIGH VAC PART**

FABRICATE PER FP-202-631-14

| ITEM | STOCK OR PART NO | TITLE OR DESCRIPTION | QTY |
|---|---|---|---|
| 5 | SL050103-21298 | SCREW, MACH, PHILLIPS FLH, 2-56 X .25, 18-8 SST, SIL PLD, SLOT VENTED | 8 |
| 4 | SA-257-402-46 | DISK MOUNT ASSY, 18MM | 1 |
| 3 | SA-257-402-11 | 10mm EOS CRYSTAL MT ASSY | 2 |
| 2 | SA-257-402-65 | 15 X 20 MM YAG MT ASSY | 1 |
| 1 | PF-257-402-06 | YAG EOS TARGET FORK | 1 |

NOTES: UNLESS OTHERWISE SPECIFIED

1 INSCRIBE OR ENGRAVE PART NUMBER AND REVISION APPROX WHERE SHOWN, .010 DEEP MAX.

2 UHV HANDLING: AFTER UHV ASSEMBLY, HANDLE WITH CLEAN LATEX OR NITRILE GLOVES IN/ON A CLEAN ROOM/SURFACE. FOR STORAGE OR SHIPPING: PLACE IN CLEAN, SEALED, VAC GRADE PLASTIC BAG THAT IS BACK-FILLED WITH NITROGEN, WITH ASSEMBLY NUMBER AND REV VISIBLE. ALTERNATIVELY, ASSEMBLY MAY BE WRAPPED IN CLEAN LINT FREE TISSUE AND UHV FOIL, AND SEALED IN A CLEAN PLASTIC BAG WITH PART NUMBER AND REV VISIBLE.

3 PACKAGING MUST FULLY PROTECT ANY MOUNTED TARGETS (YAGS, FOILS, ETC.) FROM DAMAGE.

---
---
---
---
---
SA-257-402-00
NEXT ASSEMBLIES:

DIMENSIONING AND TOLERANCING IS IAW ASME Y14.5-2009

UNLESS OTHERWISE SPECIFIED
DIMENSIONS ARE IN INCHES.
TOLERANCES:
BREAK EDGES .005-.015
INTERNAL CORNERS R.015 MAX
FRACTIONS ± ---
DEC .XX± ---
.XXX± ---
.XXXX± ---
ANGLE ± ---
ALL SURF ---

SCALE: 2:1
DO NOT SCALE DRAWING

ESTIMATED MASS: .240 LB

CAD FILE NAME: sa25740205.dft

SLAC NATIONAL ACCELERATOR LABORATORY
U.S. DEPARTMENT OF ENERGY

THE DRAWINGS, SPECIFICATIONS AND OTHER DATA HEREIN PROVIDED SHALL NOT BE COPIED, PUBLISHED OR OTHERWISE FURTHER DISSEMINATED WITHOUT PRIOR WRITTEN PERMISSION OF STANFORD UNIVERSITY/SLAC

| | | DATE |
|---|---|---|
| ENGR | S. GREEN | |
| DWN | G. BOUCHARD | 20150303 |
| CHKR | O. FRENER | |

APPROVALS
S. GREEN
C. IVERSON
---
---

# FACET DIAGNOSTICS SYSTEMS UPSTREAM OTR, 6", OFS YAG EOS TARGET ASSY

---

DRAWING NUMBER: SA-257-402-05
REVISION NUMBER: 02
D
SH 1 OF 1

SA-257-402-05 02 D

SLAC FORMAT V3.3