REV	DESCRIPTION	DWN	CHKR	APVD	DATE
01	PER ECR-Txxxxx	GB	GB	SG	5/3 2021

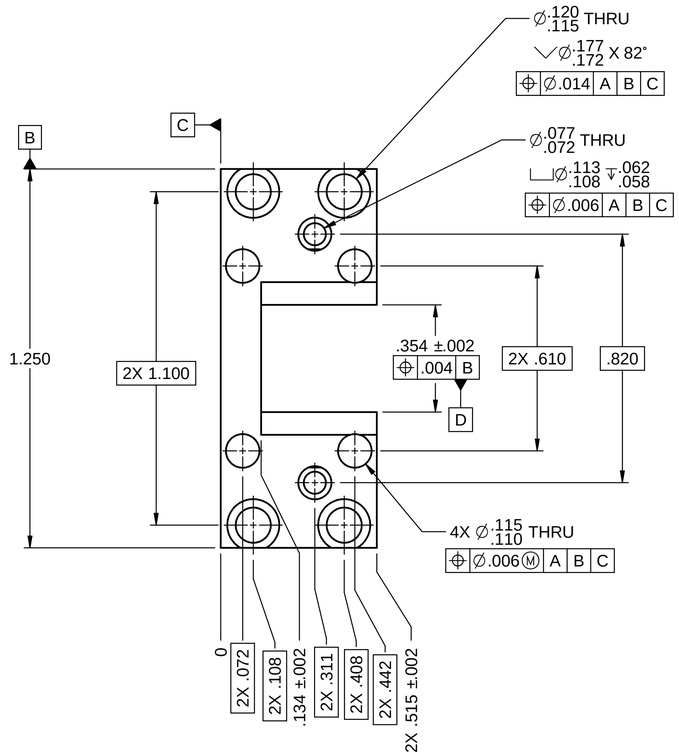

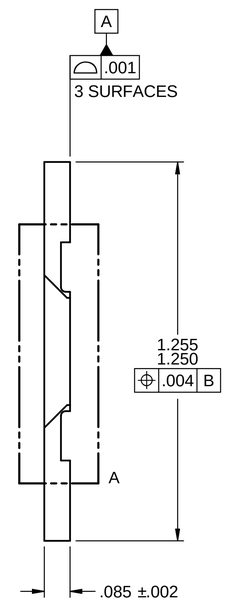

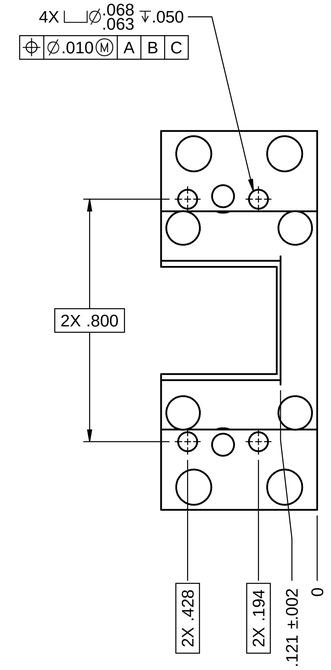

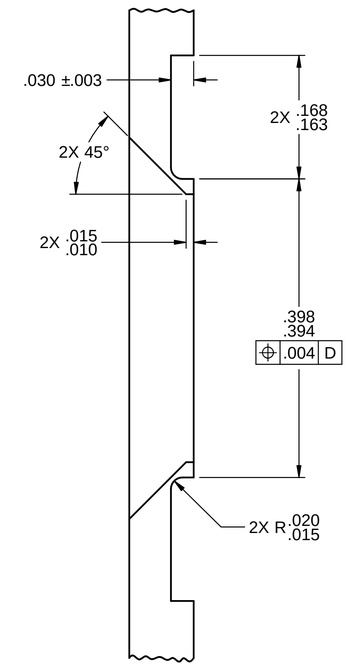

DETAIL A
SCALE: 10:1

ULTRA HIGH VAC PART

FABRICATE PER FP-202-631-14

NOTES: UNLESS OTHERWISE SPECIFIED

1 MATERIAL: 304 SST IN ACCORDANCE WITH ASTM A276. MILL SOURCE CERTIFICATES REQUIRED, INCLUDING HEAT NUMBER AND CHEMICAL ANALYSIS.

2 BAG AND LABEL WITH PART NUMBER AND REVISION.

	STOCK NO	MATERIAL DESCRIPTION
1		SST AISI TYPE 304, ASTM A276

ESTIMATED MASS: .007 LB

CAD FILE NAME: pf25740212.dft

SA-257-402-11
NEXT ASSEMBLIES:

DIMENSIONING AND TOLERANCING IS IAW ASME Y14.5-2009

UNLESS OTHERWISE SPECIFIED
DIMENSIONS ARE IN INCHES.
TOLERANCES:
BREAK EDGES .005-.015
INTERNAL CORNERS R.015 MAX
FRACTIONS ± ---
DEC .XX± ---
.XXX± .005
.XXXX± ---
ANGLE ± 1°
63 ALL SURF

SCALE: 4:1
DO NOT SCALE DRAWING

SLAC NATIONAL ACCELERATOR LABORATORY — U.S. DEPARTMENT OF ENERGY

THE DRAWINGS, SPECIFICATIONS AND OTHER DATA HEREIN PROVIDED SHALL NOT BE COPIED, PUBLISHED OR OTHERWISE FURTHER DISSEMINATED WITHOUT PRIOR WRITTEN PERMISSION OF STANFORD UNIVERSITY/SLAC

		DATE
ENGR	M. LITOS	
DWN	G. BOUCHARD	20150330
CHKR	O. FRENER	

APPROVALS
M. LITOS
C. IVERSON

FACET DIAGNOSTICS SYSTEMS 10mm EOS CRYSTAL MT ASSY FRONT MOUNT

DRAWING NUMBER: PF-257-402-12
REVISION NUMBER: 01
D
SH 1 OF 1

PF-257-402-12 01 D

SLAC FORMAT V3.3