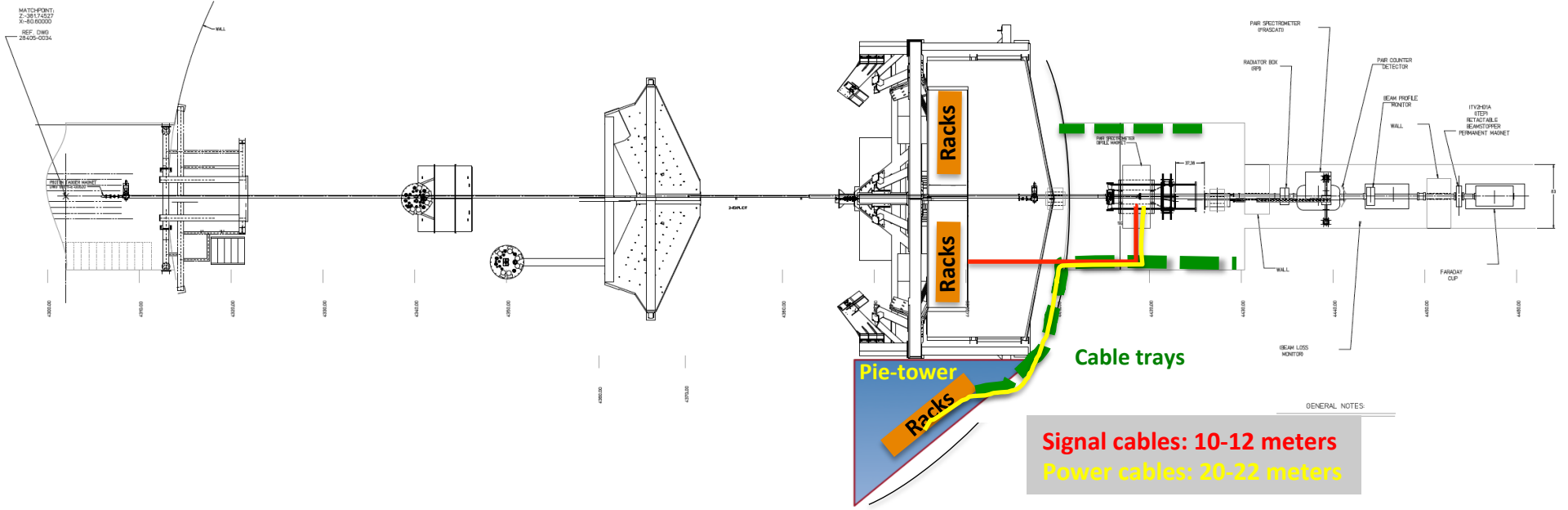
Racks
Racks
Pie-tower
Racks
Cable trays
Signal cables: 10-12 meters
Power cables: 20-22 meters

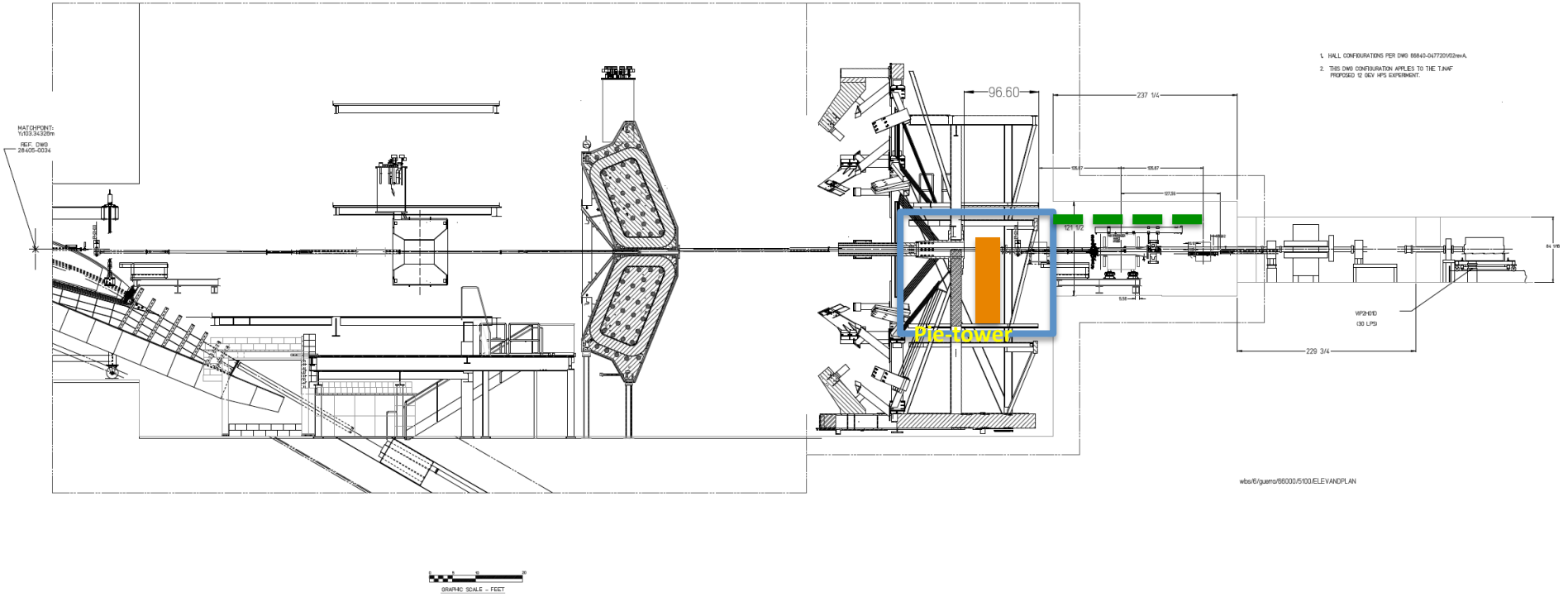
96.60
237 1/4
Pie-tower
229 3/4