# Studies of Beam Loss Effect on Silicon Strip Modules in ATLAS Detector

## with Added Slides for HPS Tracking Meeting

**A.A. Grillo, V. Fadeyev**
**for**
**P. Rose, C. Betancourt, H.F.-W. Sadrozinski,**
**A. Seiden, E. Spencer, M. Wilder**
**SCIPP - UCSC**

# Three Scenarios

- There are three scenarios to be considered:
  - The ATLAS (LHC) type of beam loss.
  - The HPS type of beam accident.
  - Laser test charge injection.

| | SPATIAL DISTRIBUTION | Time Evolution | Charge Deposition |
|---|---|---|---|
| ATLAS (LHC) | Nearly Uniform | Onset unclear but dump time is 90 μs | $5.4 \times 10^5$ MIPS/ bunch at peak |
| HPS | Localized to ~1cm | ~ 40 μs | $10^6$ $e^-$/strip in 40 μs |
| Laser Tests | Localized to 2mm x 2mm | Order 1 μs time scale | $10^6$ MIPS/strip |

# Beam Loss Issues

- At design luminosity the LHC will contain ~$10^{11}$ protons per bunch with a bunch spacing of 25 ns.
- If the beam becomes misaligned, it can scrape collimators or beam pipe, sending a spray of particles into the ATLAS detector.
- Before the beam loss monitors force a beam dump, the silicon strip detectors (the ATLAS SCT) may experience a large deposition of charge.
- Can this cause damage to the detector?

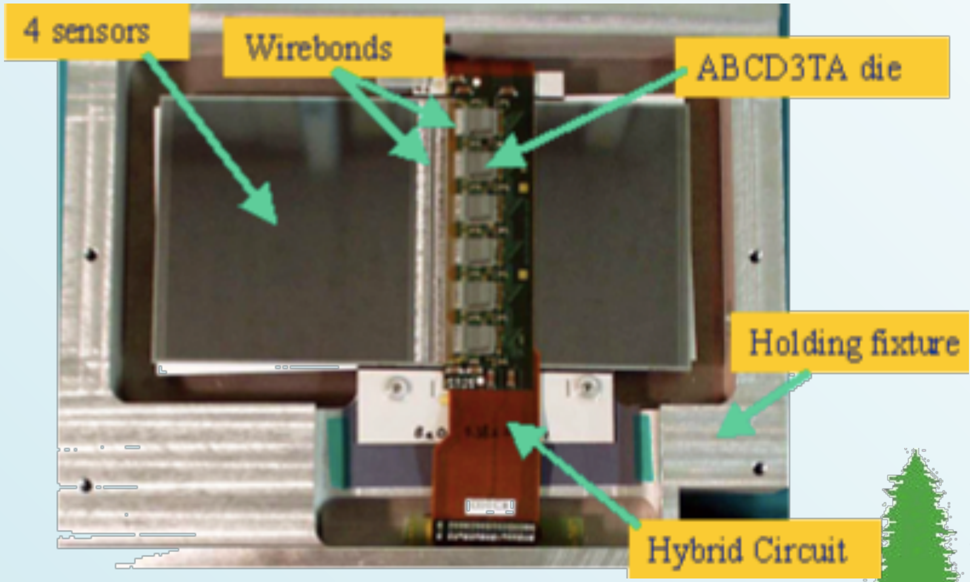

# Vulnerabilities of the SCT Detector Module

- **Each SCT module is made up of the components shown in the picture below.**
- **All components inside the detector volume have been thoroughly tested for radiation hardness such that the extra radiation damage from a beam loss can be tolerated.**
- **Two components, however, may have a problem with a large instantaneous charge deposition.**
  - **A large current or voltage spike at the ABCD readout IC input may damage its first stage.**
  - **Large charge collection at the implant strip may cause breakdown of the coupling capacitor between the implant and readout strips.**
  - **Either may cause permanent damage.**

**ATLAS SCT Module**

**Block Diagram**

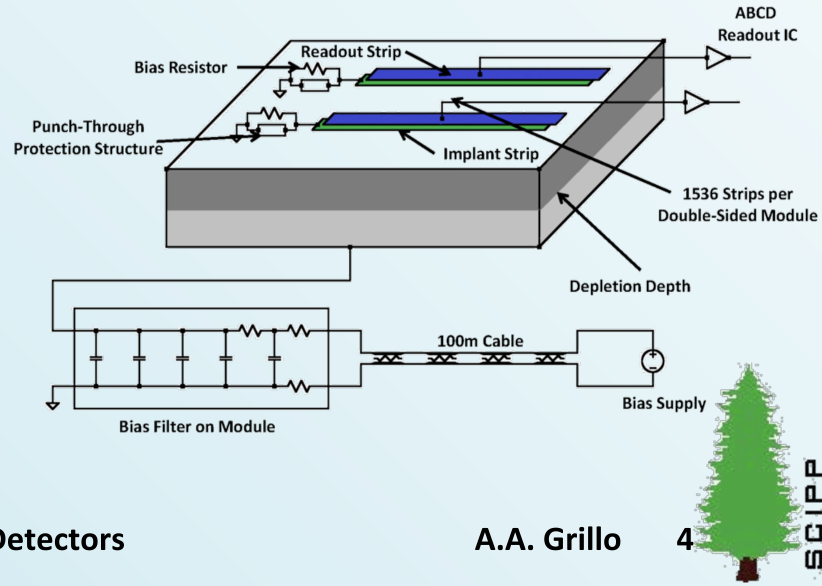

# Previous Tests

- **Several tests have been conducted to test the limits of these two vulnerabilities:**
  - **The ABCD has an input spec limit of 450 V and 5 nC in 25 ns.**
    - **It was not clear how this compares to expected conditions of a realistic beam loss but this limit was tested on single channels and no failures were found up to the voltage limit & twice the charge limit. [1]**
  - **The dielectric forming the coupling capacitor between the implant strip and aluminum readout strip is spec'd to have a breakdown voltage $\geq$ 100 V. Exceeding this may cause the channel to fail.**
    - **Tests have been performed on sensor strips using lasers to emulate the charge deposition of minimum ionizing particles.**
    - **Voltages in excess of 100 V have been measured with charge deposition equivalent to $\geq 10^6$ minimum ionizing particles (MIPs) per strip (spot size ~27 strips) without seeing breakdown, but damage has been seen at higher charge levels. [2,3]**

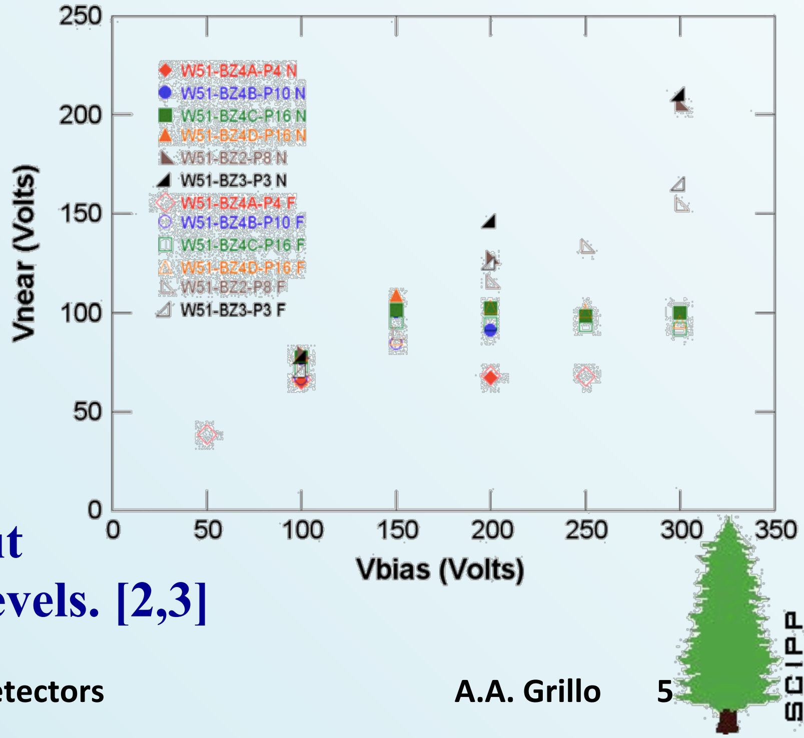

# This Study

- This study attempts to incorporate the electrical contributions of the entire module and consider realistic beam loss scenarios with regard to expected charge deposition distributions.
- Given the difficulty in creating the expected high density spray of particles into a module, this study will rely on detailed simulations.
- However, the models we have used are based upon sensor and ASIC measurements we have made in our lab.

- This study is still in progress so the results are preliminary, however, they show some interesting features.

# Tests & Simulations of ABCD Front-end

- **With the present ABCD IC, the base-emitter junction of the front transistor handles any excess current or voltage.**
  - **We then chose the simplest model to simulate the ABCD response, namely a diode with series resistance and breakdown voltage tuned to match the response we saw with our test setup.**

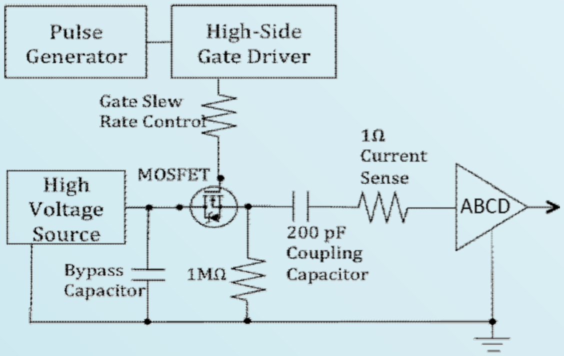

**Tester to "Zap" ABCDs & Current Pulse into Front-end**

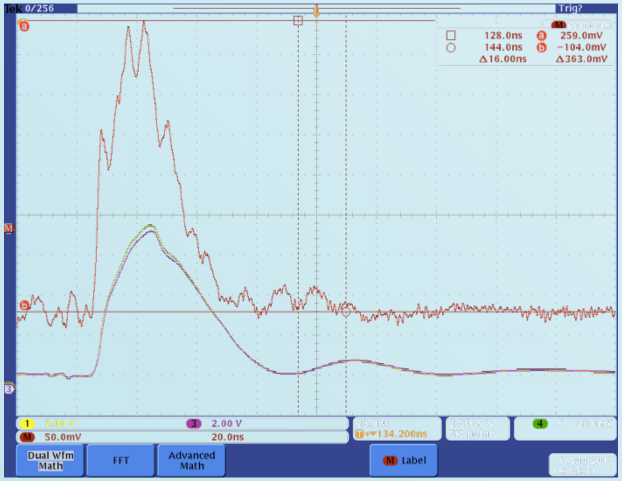

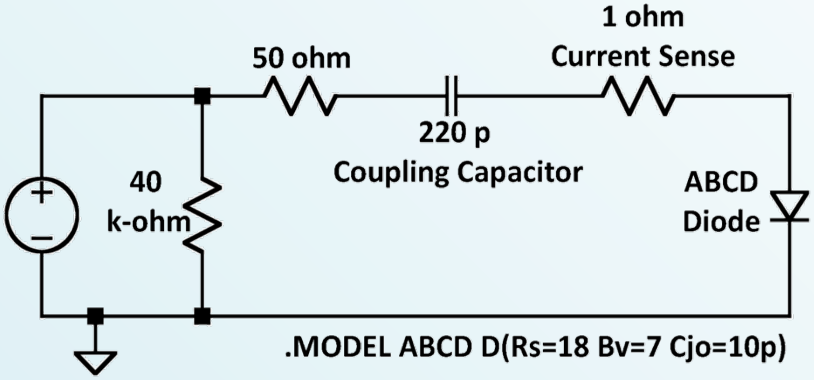

.MODEL ABCD D(Rs=18 Bv=7 Cjo=10p)

**SPICE simulation of ABCD being "Zapped" & Current Pulse into Front-end**

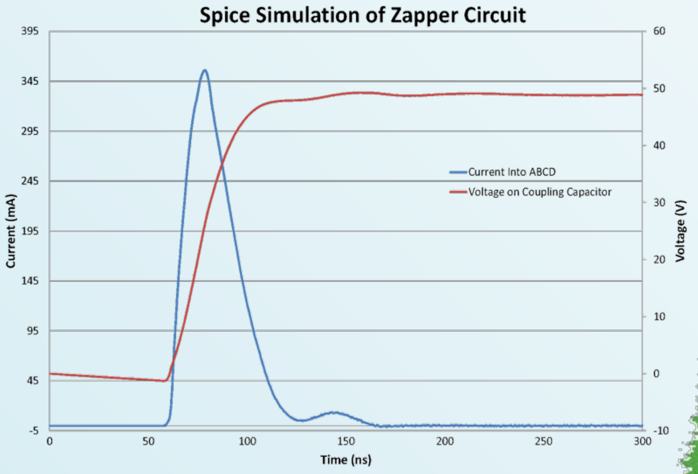

# Expected Distribution of Charge Deposition

- A group from University of Sydney has simulated the likely beam loss scenario as reported in an ATLAS note [4]:
  - They assumed 0.1% of the beam ($10^8$ protons) scraping the beam pipe or the TAS (Target Absorber Secondaries) collimator, tracking the resulting secondaries through the SCT.
  - The two plots below show the resultant distribution of charge across the inner SCT barrel for one beam bunch.
  - The charge deposition is fairly uniform; using a scale of 3.5 fC/MIP, their results equate to a distribution of incident particles ranging from ~$0.4 \times 10^5$ MIPs to $0.5 \times 10^6$ MIPs with $0.2 \times 10^6$ MIPs most probable.

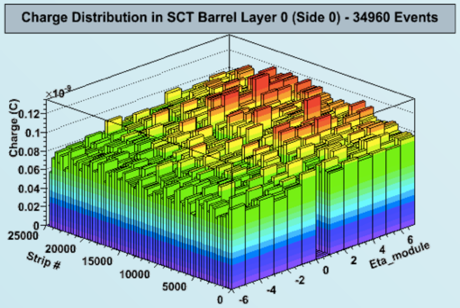

7 TeV TAS collimator scrape scenario for 35k fully simulated events

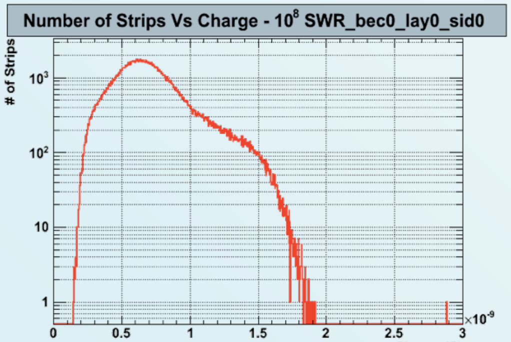

$10^8$ scaled sampling for 7 TeV TAS scrape scenario. Plot of number of strips for given charge on Inner Barrel

# Beam Loss Timing

- An LHC bunch will pass every 25 ns with each bunch scraping the obstruction.
- Many timing sequences are possible.
- We assume for now a drift of the beam gradually scraping more of the bunch fringe until the beam abort is activated.
  - Then one cycle of the complete ring to send all bunches to the dump.
- An increasing number of MIPs will then hit a module every 25 ns until the beam is cleared, which takes ~90 µs.

# Simulation Details

- We used SPICE to simulate the response of a full SCT module to such a beam loss scenario.

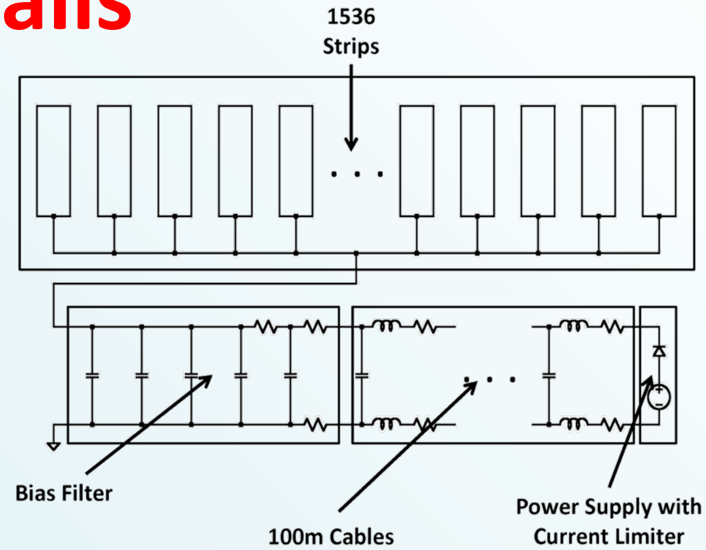

1536 Strips

Bias Filter

100m Cables

Power Supply with Current Limiter

- Each strip was modeled as a distributed circuit using SPICE components.

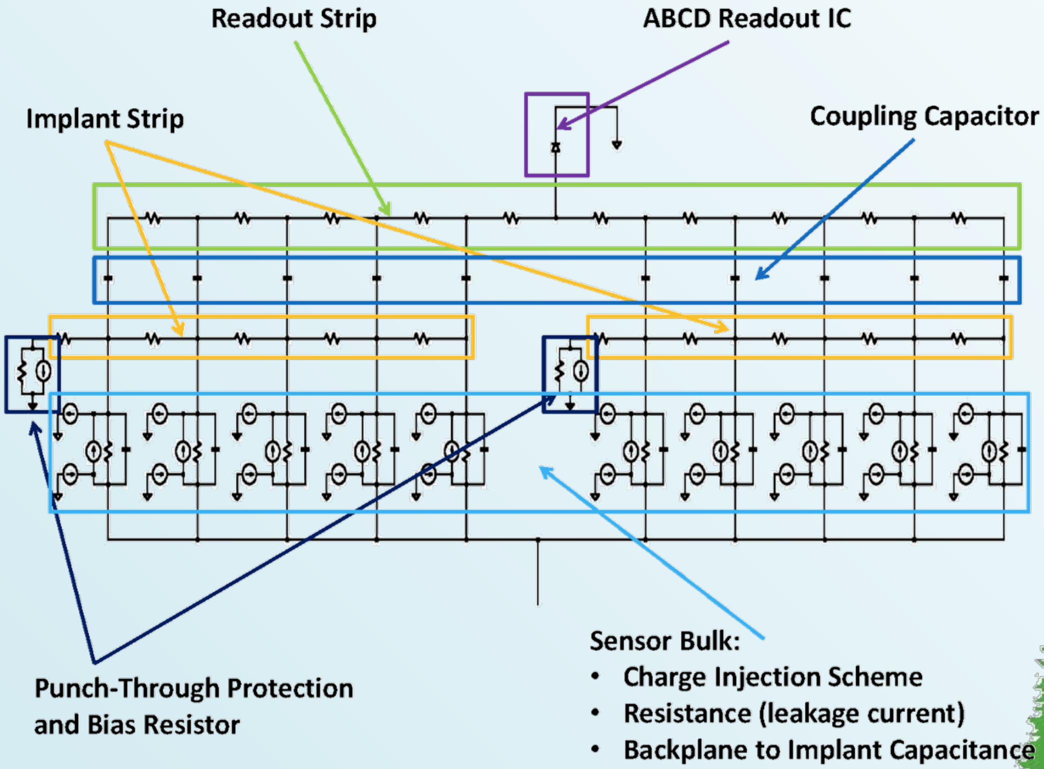

Readout Strip

ABCD Readout IC

Implant Strip

Coupling Capacitor

Punch-Through Protection and Bias Resistor

Sensor Bulk:
- Charge Injection Scheme
- Resistance (leakage current)
- Backplane to Implant Capacitance

# Details of Sensor Behavior are Included

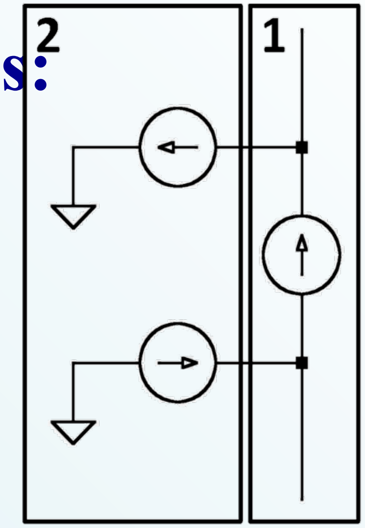

- The charge injection scheme has two components:
  - Component 1 models the timing structure of the beam.
  - Component 2 models the dependence of the charge collection on the bias voltage.
  - For bias voltages below the full depletion value, the amount of collected charge decreases due to smaller depletion depth.

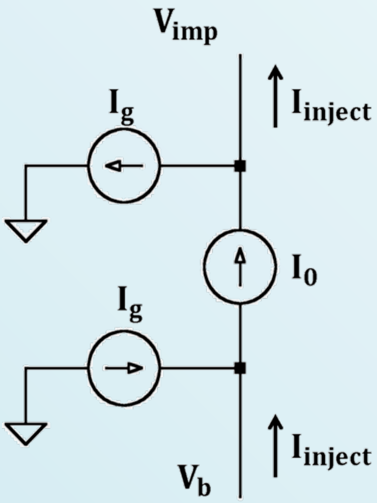

For $(V_b - V_{imp}) > V_{fd}$ :

-> $I_{inject} = I_0$

->$I_g = 0$

For $(V_b - V_{imp}) \leq V_{fd}$ :

-> $I_{inject} = I_0\sqrt{(V_b - V_{imp})/V_{fd}}$

->$I_g = I_0 - I_{inject}$

- Also, charge collection time increases with increasing deposition as $Q^{1/3}$.

# Simulation Sequence

Assumptions -> Maximum charge collected per strip = 2 nC = 5.4 $* 10^5$ MIPs
-> Beam loss occurs linearly over various time profiles (100 ms, 10 ms, … , 0.01 ms)
-> Bunch spacing is 25 ns

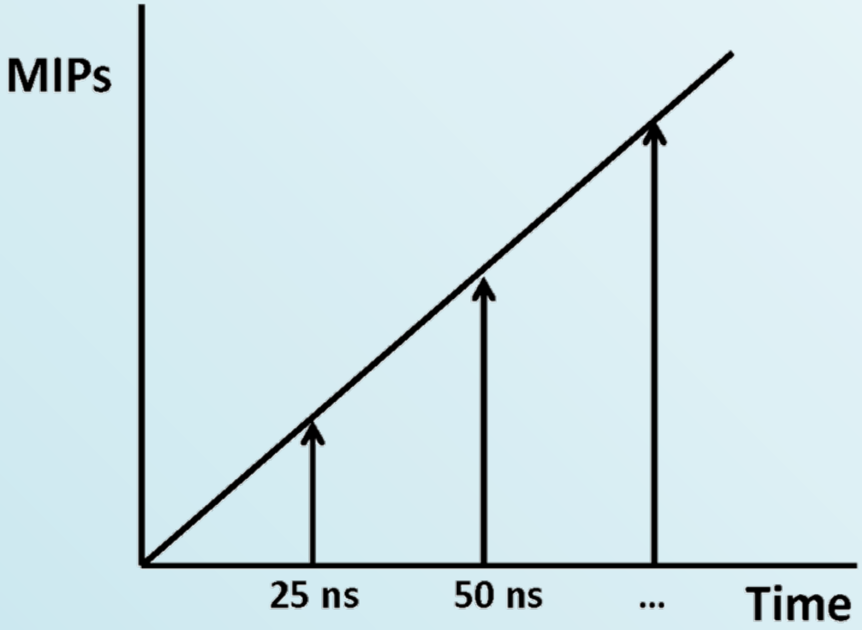

Every 25 ns:

- Read number of MIPs, $MIPs$
- Calculate corresponding charge, $Q$
- Calculate charge collection time, $t_{cc}$
- Calculate average current, $I_{avg} = Q/t_{cc}$
- Add $I_{avg}$ to existing value in each time bin
- Result : Array with each index corresponding to a time in the simulation, and the array value corresponding to the total current at that time.
- Use this array to print a PWL file

$$Q = MIPs * 80\frac{e^-}{\mu m} * 289.5\ \mu m * 1.6 * 10^{-19}\frac{C}{e^-}$$

$$t_{cc} = 10\ ns\ * \sqrt[3]{MIPs}$$

# Electrical Response of Module to “Slow” Beam Loss

- Simulation results for beam loss and dump in 100 ms reaching a peak of $0.54 \times 10^6$ MIPs/strip/25ns.
  - Note that the bias voltage quickly drops as the charge is injected.
  - This is because the capacitance of the bias filter is depleted of charge and the power supply cannot maintain the voltage.
  - This drop in bias voltage and field shielding by the large amount of charge deposited greatly limits the charge collection.
- The voltage across the coupling capacitor remains < 25 V and the ABCD input current remains <70 µA (1.8 pC/25 ns) – both well below spec limits.

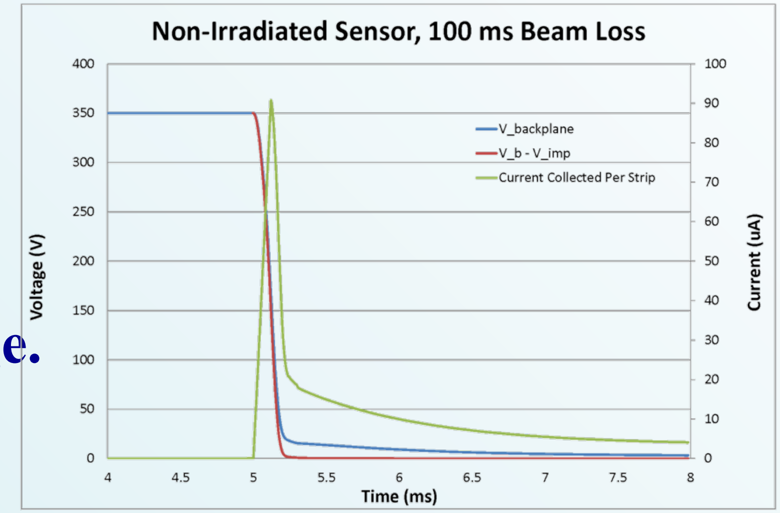

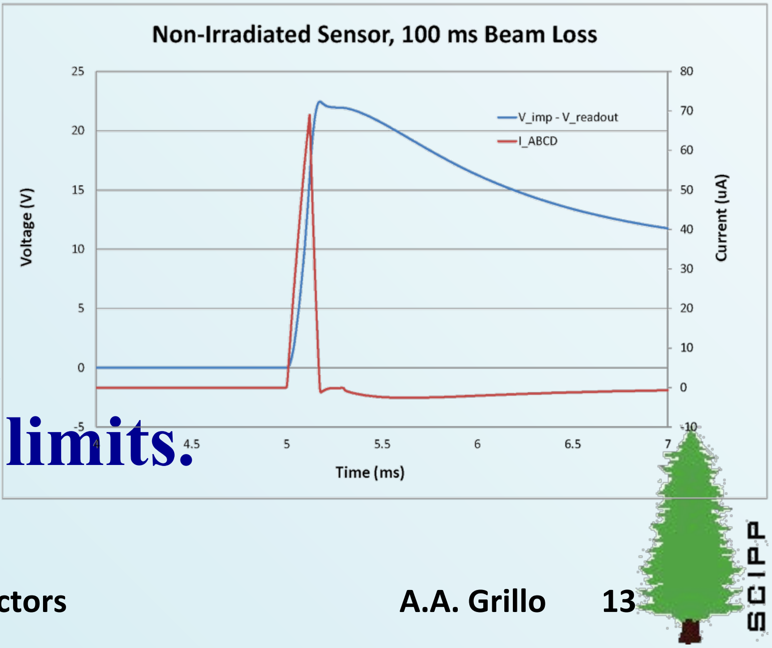

# Electrical Response for Two Other Conditions

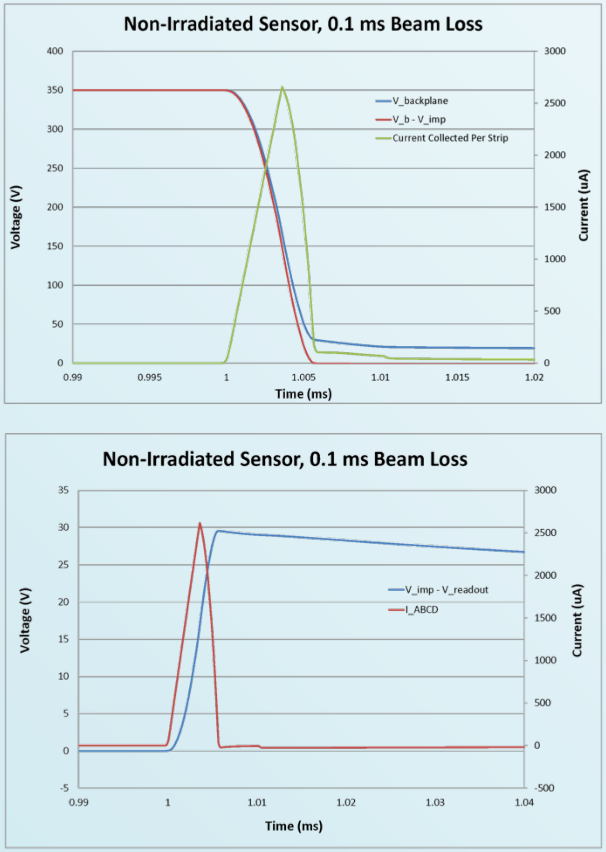

0.1 ms Scenario

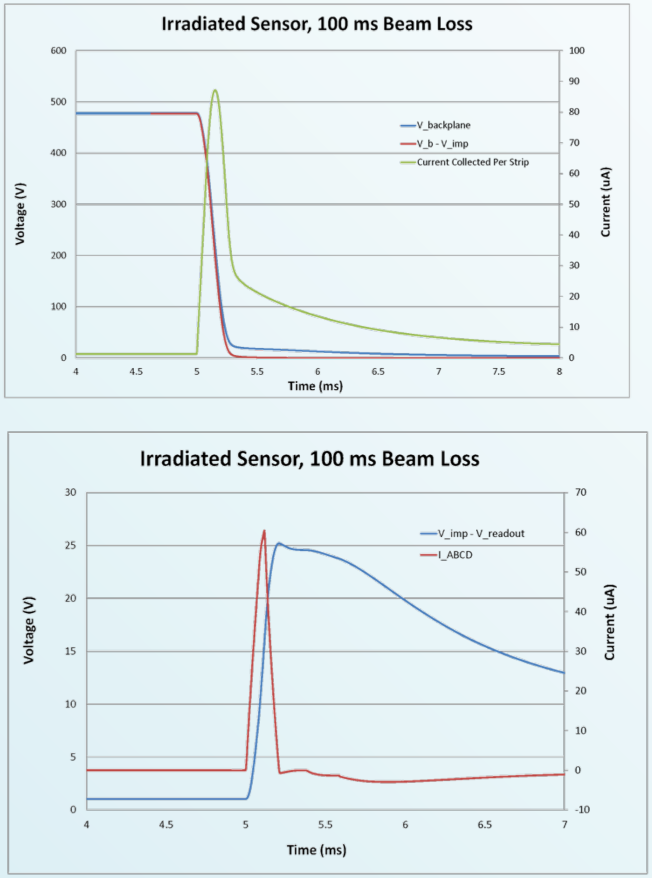

100 ms Scenario with Irradiated Sensor

- **Even with a 0.1 ms scenario, the bias still drops quickly enough to limit the charge collection keeping the coupling capacitor voltage and ABCD current within a safe range.**

# Electrical Response for Several Time Evolutions

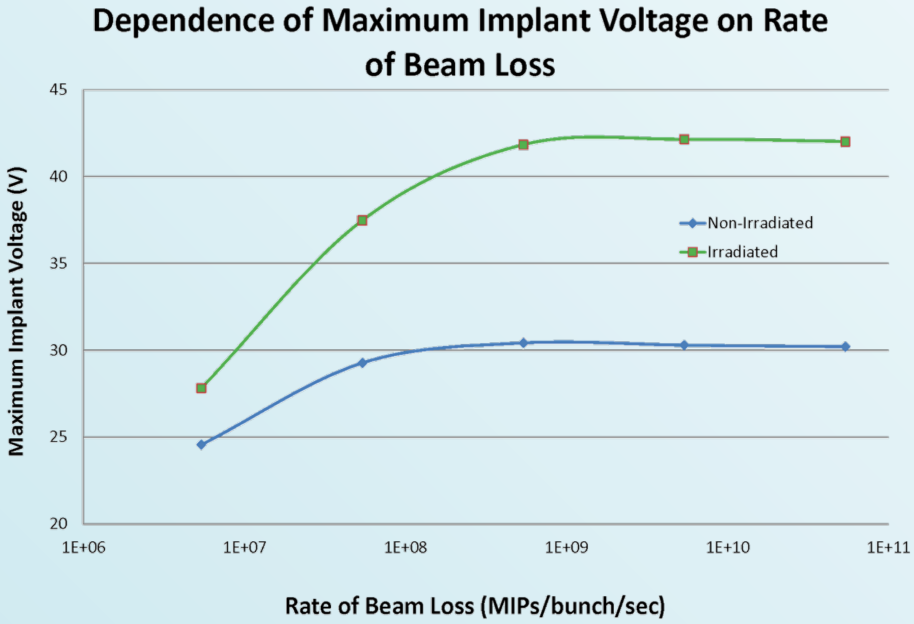
Dependence of Maximum Implant Voltage on Rate of Beam Loss

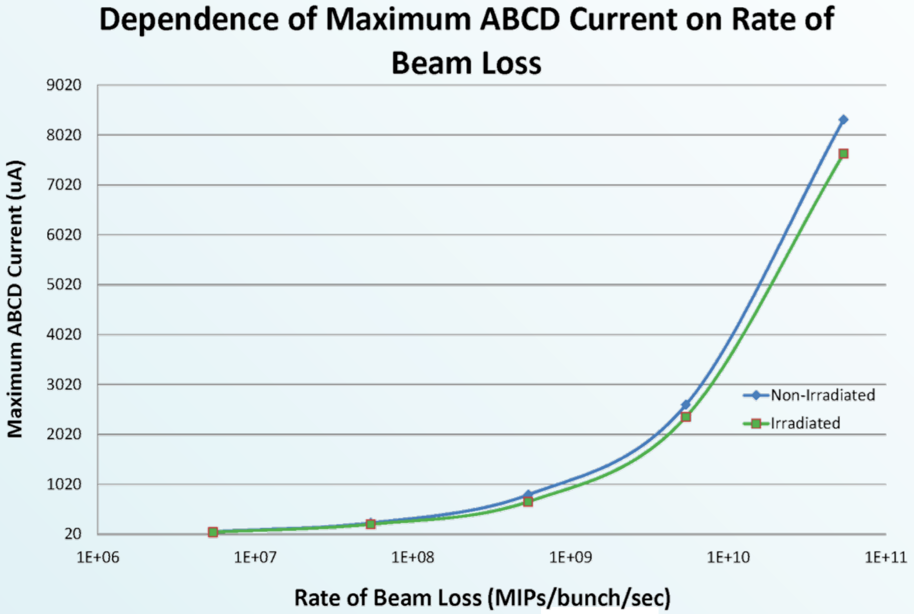
Dependence of Maximum ABCD Current on Rate of Beam Loss

- **These plots show the electrical response of the module for the same peak loss of $5.4 \times 10^5$ MIPs/bunch but varying the speed at which the loss evolves.**
  - **The data points span full evolution times of 100 ms to 0.01 ms**
- **Even with the fastest rate, the implant voltage and the ABCD input current remain in very safe ranges.**

# Careful if Limiting Charge Deposition to One Strip

- **Here are the results of simulating a laser pulse hitting a single strip with the same intensity.**
  - **Note that the backplane voltage (blue curve above) does not decrease and the effective bias voltage (green curve above) only decreases slightly since the implant voltage is increasing.**

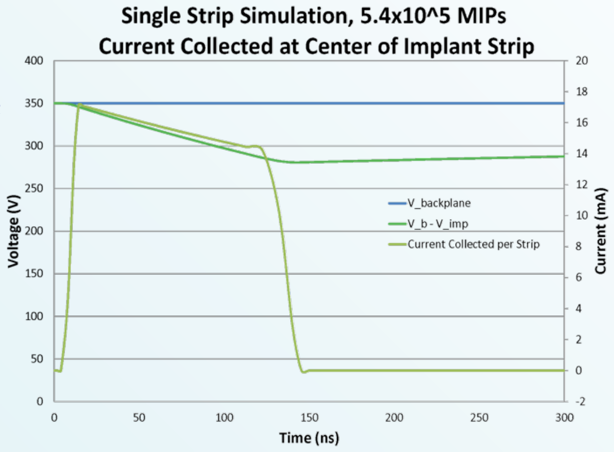

  - **The voltage across the coupling capacitor (blue curve below) now reaches 70 V (> 2x the full module case) and the ABCD input current (red curve below is 6x greater.**

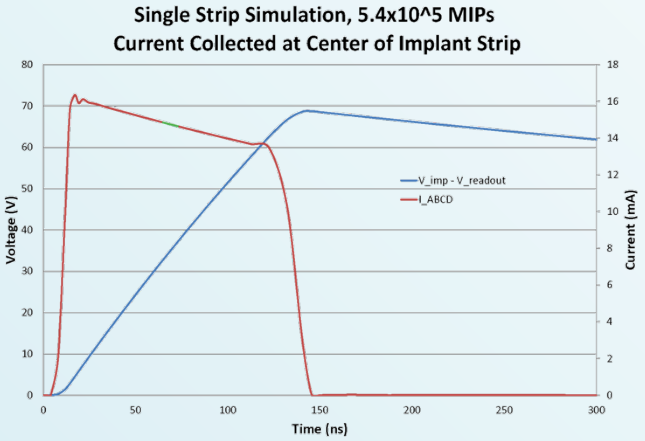

# Larger Charge Deposition onto One Strip

- **Here is the case of $1x10^7$ MIPs on one strip.**
  - **Now the voltage across the coupling capacitor (blue curve below) exceeds 90 V and the ABCD input current (red curve below) reaches 17 mA – still within spec limits but much closer to the maximum allowable.**
  - **Actually, the voltage across the coupling capacitor would have reached a much higher voltage but the simulation included a model for capacitor breakdown at 100 V, which activated.**
    - **We're not sure why the voltage appears to limit at 90 V instead of 100 V. This needs further study.**

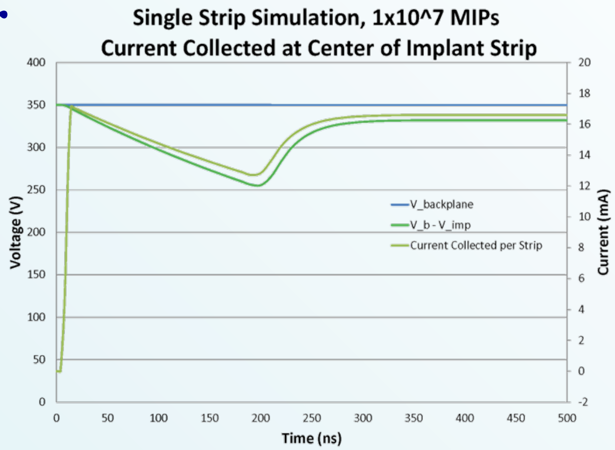
Single Strip Simulation, 1x10^7 MIPs
Current Collected at Center of Implant Strip

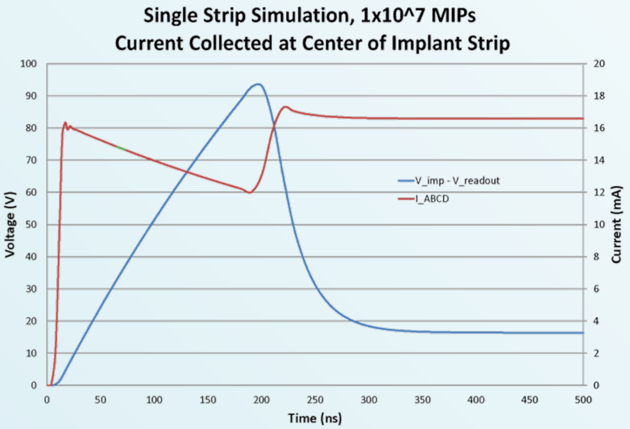
Single Strip Simulation, 1x10^7 MIPs
Current Collected at Center of Implant Strip

# Conclusions & Continuing Work

- We expect beam loss scenarios to deposit large amounts of charge across the entire sensor.
- Depending upon the time evolution, this distribution of charge results in several mitigating phenomena:
  - Charge collection time increases.
  - Bias voltage decreases due to the finite charge stored on the filter capacitors and to the 2 mA current limit of the the bias supply thus reducing the amount of charge collected.
- Depending upon the time evolution of the beam loss, the resulting module response may provide some self-protection.
- Subjecting only a small number of strips to large charge deposition may show very different results.  Are they realistic?
- More variations of beam loss intensities along with time evolutions must be simulated to search for limits of safe operation.
- Upgraded detectors must take care with biasing so as not to lose these self-protection aspects of the full system.

# References

1. **A. Kuhl, V. Fadeyev, A.A. Grillo, F. Martinez-McKinney, J. Nielsen, E. Spencer, M. Wilder, ATLAS ABCD hybrid fatal charge dosage test, 2011 JINST 6 C12021.**
2. **H. F.-W. Sadrozinski *et al*., Punch-through protection of SSDs, *Nucl. Instrum. Meth*ods A699 31 (2013).**
3. **K. Hara *et al*., Beam splash effects on ATLAS silicon microstrip detectectors evaluated using 1-w Nd:YAG laser, *Nucl. Instrum. Meth*ods A541 15 (2005).**
4. **N. Patel *et al*., Charge deposition in the SCT due to beamloss, ATLAS Note ATL-INDET-PUB-2013-002.**

# What we know about D0 Sensors used in HPS

1. **Key parameters: implant strip resistance and PTP are not measured. (At least I'm not aware of the measurements.) NB: they are usually not measured, since they needed for unusual operation conditions. They define the implant voltages in the voltage division scheme {diagram below}.**
2. **R(implant) might be similar to the ATLAS SCT, which is of the same type – p-on-n. In which case it would be 85 KOhm/cm. {It's 15 KOhm/cm for n-on-p ATLAS07 devices.}**
3. **The PTP distance for D0 sensors is ~21 um, or 2x ATLAS SCT {next slide}. The R(PTP) is ~D^2 => D0 sensors might be worse in that respect.**
4. **A guess would be much higher voltages than we saw with ATLAS07 under the same conditions. This would be due to long strips with higher implant resistance, and potentially higher PTP resistance.**

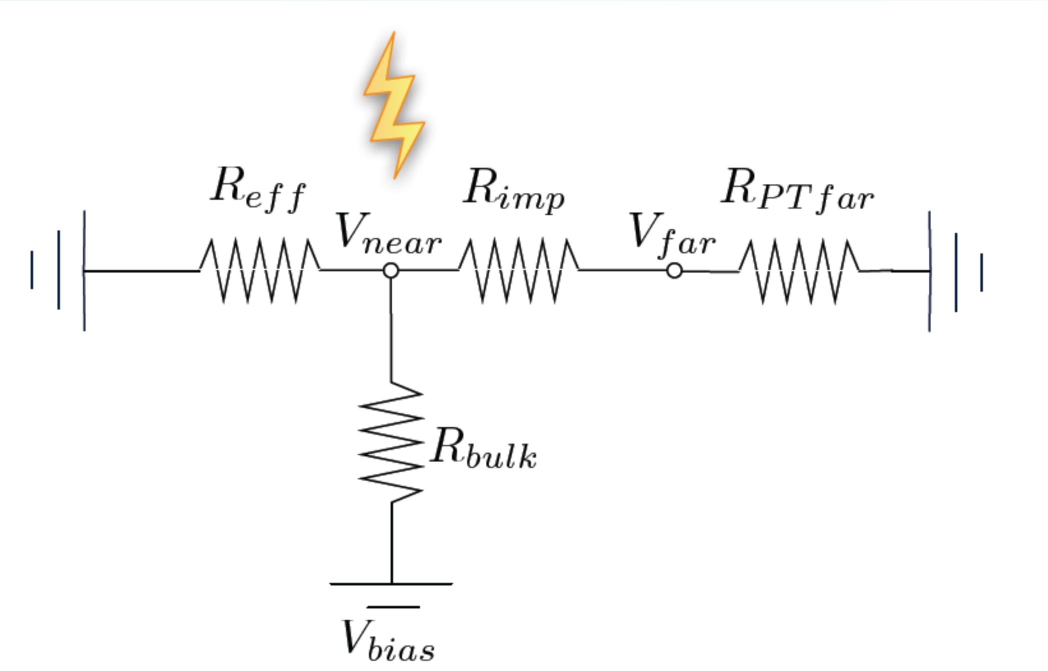

# R(PTP)

Rough PTP evaluation with DC scans. Qualitative metrics are : turn-on voltage and R(PTP) at higher voltages.

ATLAS SCT (p-on-n)

ATLAS07 (n-on-p)

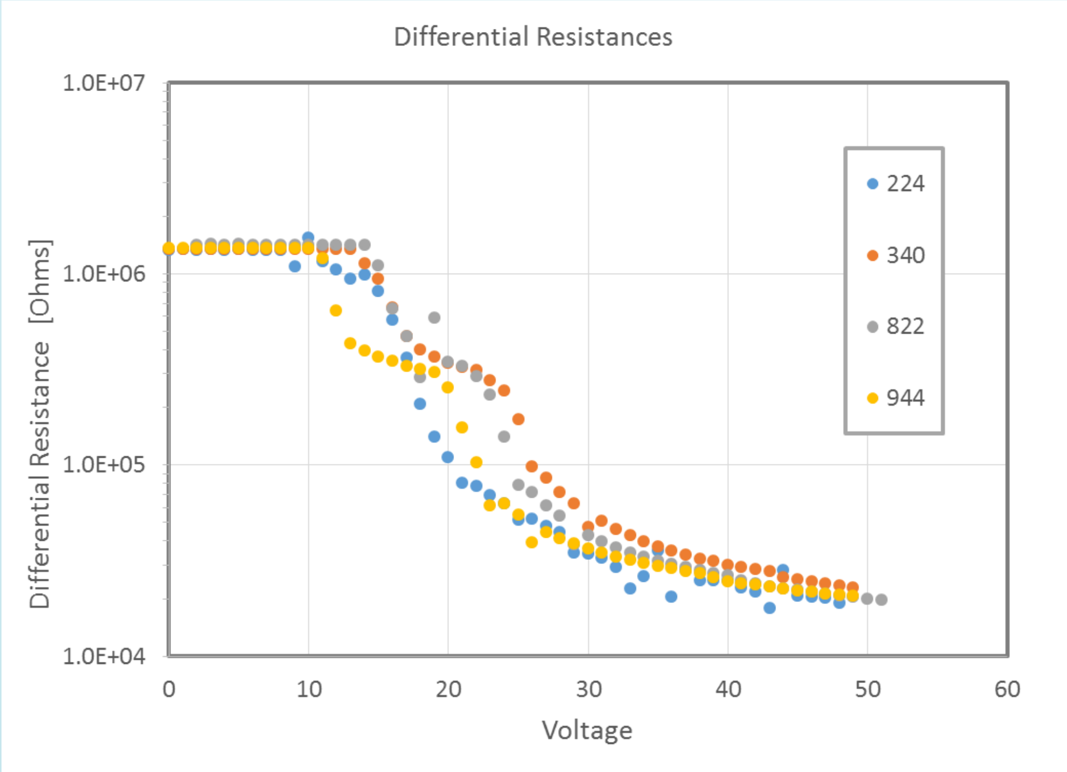

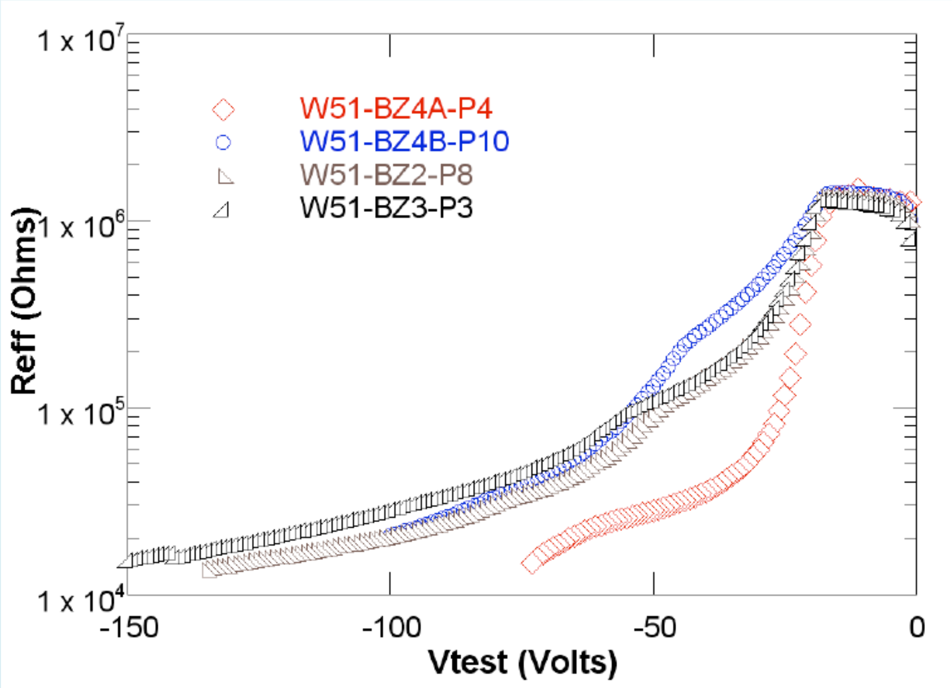

Figure 4. DC scan of effective resistance $R_{eff}$ as a function of applied test voltage $V_{test}$ for a few sensors from W51 taken at $V_{bias}$=200V [2].

# PTP structrures

## 1. PTP distances and geometry might imply larger R(PTP) for D0 sensors.

ATLAS SCT sensor: measured distance between the end of the implant and the bias ring is 11 um.

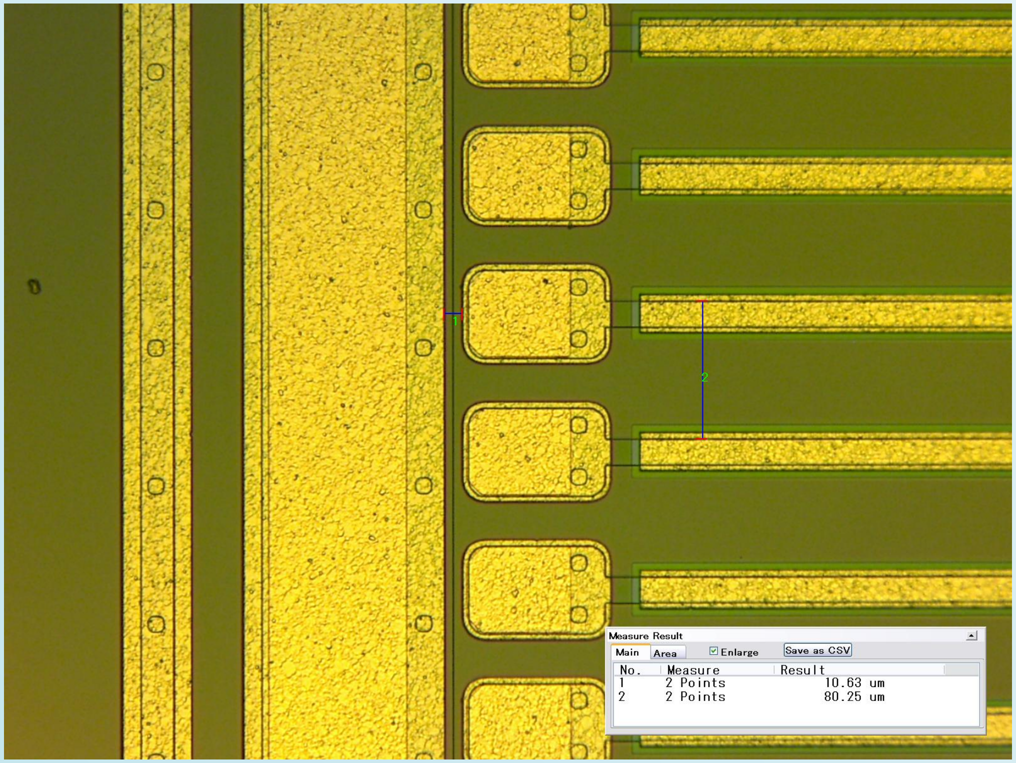

| No. | Measure | Result |
|---|---|---|
| 1 | 2 Points | 10.63 um |
| 2 | 2 Points | 80.25 um |

D0 sensor: measured distance between the end of the implant and the bias ring is 21 um.

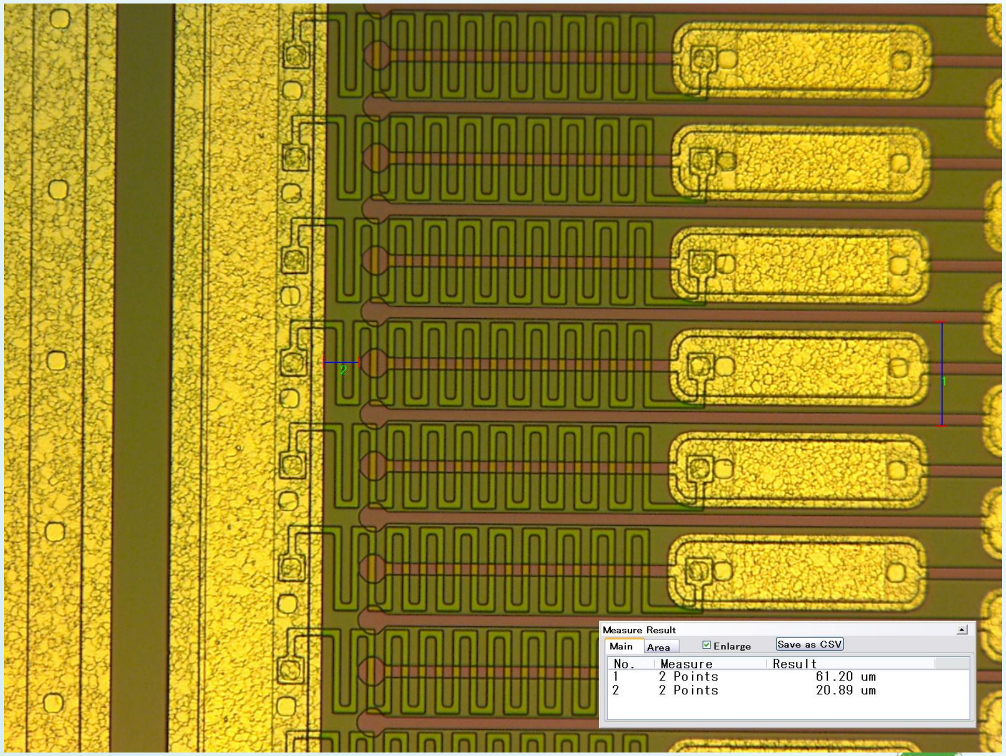

| No. | Measure | Result |
|---|---|---|
| 1 | 2 Points | 61.20 um |
| 2 | 2 Points | 20.89 um |

# “Double-metal” Sensors Project

1. The punch-through structure on sensors studies in the lab with laser charge injection limits the voltage on the implant (to different levels, depending on the details of the structure).
2. But the large implant resistance (comparable to R(ptp) ~ 10s of KOhms) isolates the rest of the strip from this safety region => larger voltages observed.
3. Basic idea: implementing the additional metal layer on top of the implant would reduce it’s resistance and extend the protection to the rest of the strip.
4. The implementation is not trivial, due to restrictions imposed by the metal layer on making the coupling capacitance, etc.

Figure from prior studies on n-on-p “ATLAS07” devices.

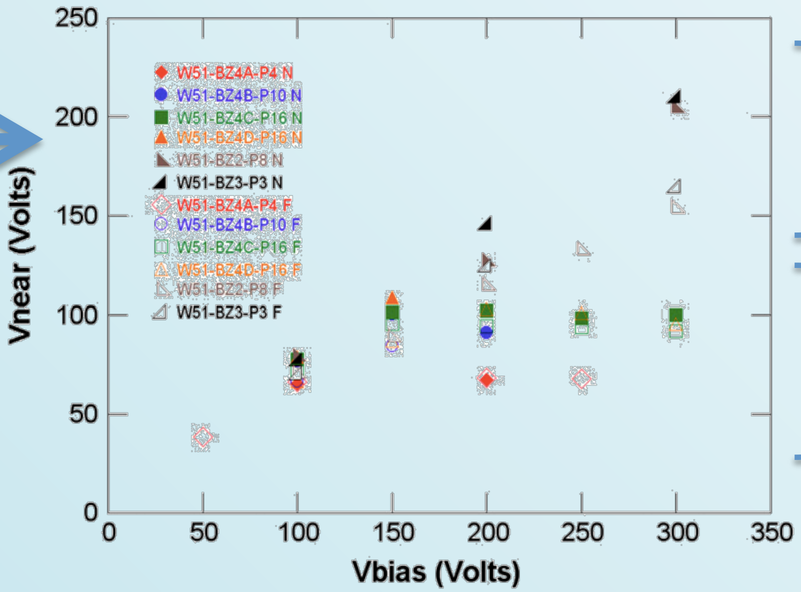

V(DC pad far from PTP structure)

V(DC pad near PTP structure)

Note:
HPK standard spec on the capacitor voltage is 100 V.

# “Double-metal” Sensors Project

1. There is a lot of technical information and the fabrication results in Victor Benitez’ talk at 22nd RD50 meeting:

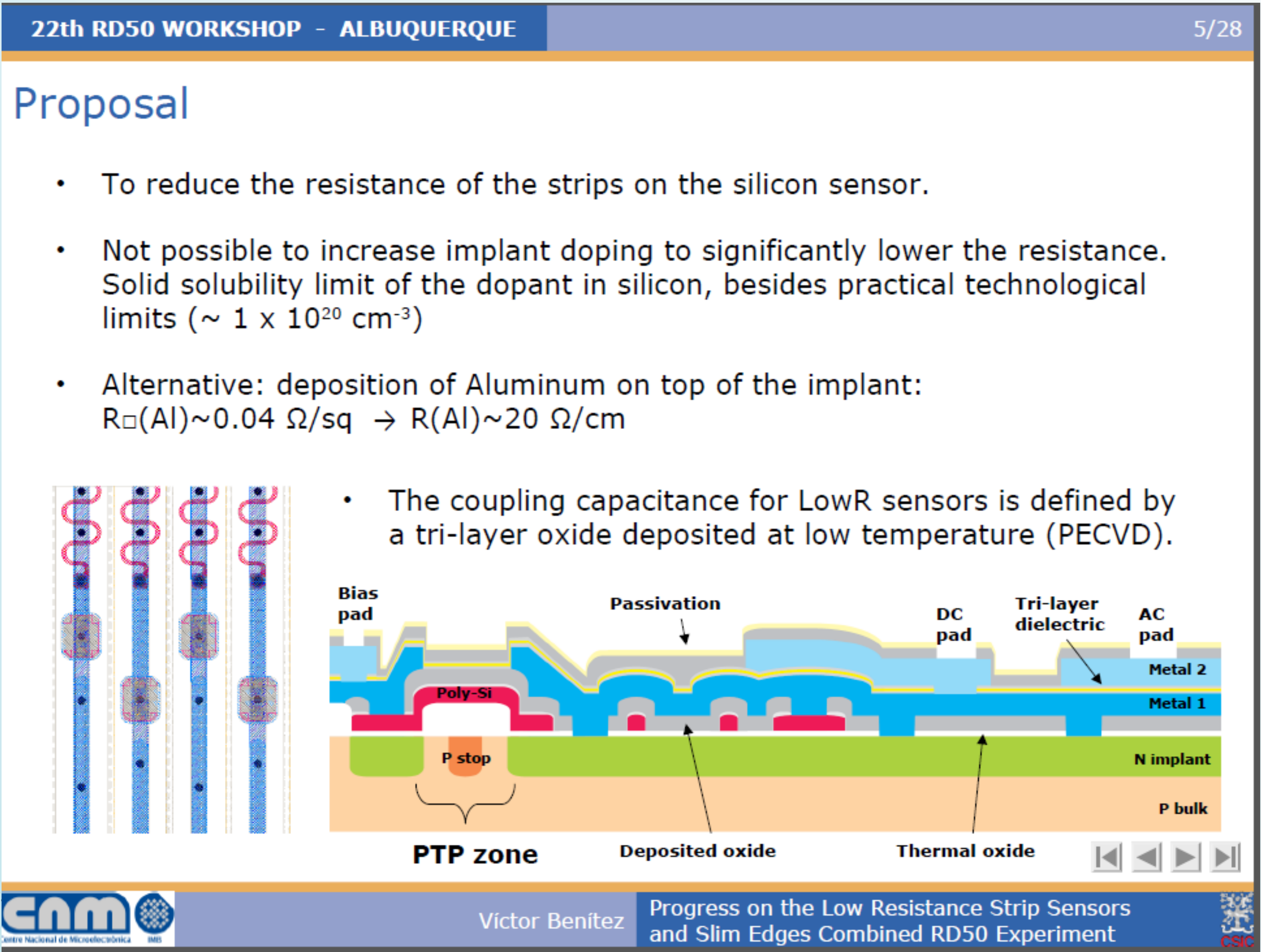

## Proposal

- To reduce the resistance of the strips on the silicon sensor.
- Not possible to increase implant doping to significantly lower the resistance. Solid solubility limit of the dopant in silicon, besides practical technological limits (~ 1 x $10^{20}$ $cm^{-3}$)
- Alternative: deposition of Aluminum on top of the implant:
  R□(Al)~0.04 Ω/sq → R(Al)~20 Ω/cm
- The coupling capacitance for LowR sensors is defined by a tri-layer oxide deposited at low temperature (PECVD).

# “Double-metal” Sensors Project

1. **Both low-R and “regular” strip sensors have been produced. We have been testing them at both CNM and UCSC.**
2. **The 2x-metal structure lowers the implant resistance from 30.5 KOhm to 51 Ohm (per 3 cm length).**
3. **There is an issue with voltage tolerance of PTP structure => next batch of sensors might solve this (due in October).**
4. **Preliminary studies with laser injections show that low-R technology fulfills its purpose to the extend possible by the PTP performance: voltages on either end of the strip are very similar, unlike on the regular sensors.**

<u>Voltages recorded near PTP (open) and far from PTP (full) when injecting charge far from the PTP structure.  Different structures are tested.</u>

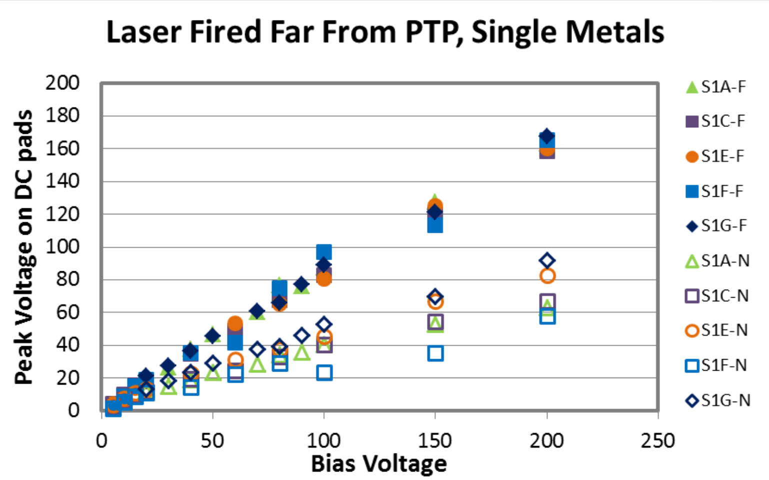
Laser Fired Far From PTP, Single Metals

<u>Voltage plateau when injection is near PTP</u>

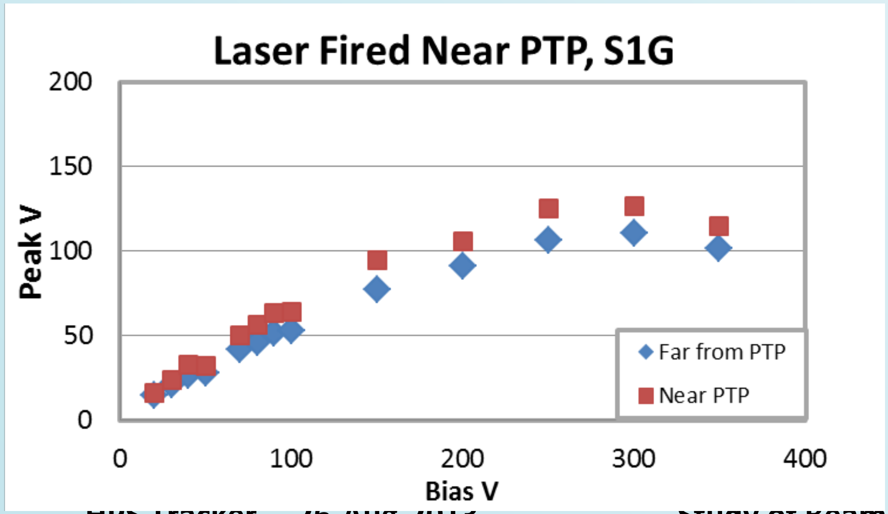
Laser Fired Near PTP, S1G

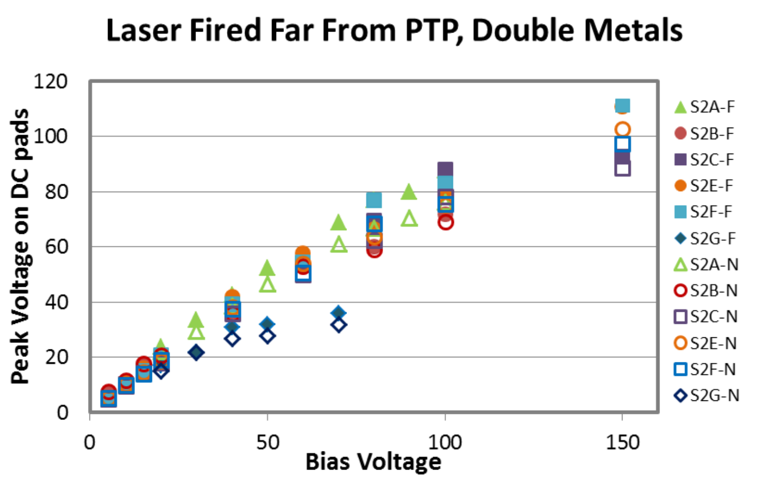
Laser Fired Far From PTP, Double Metals